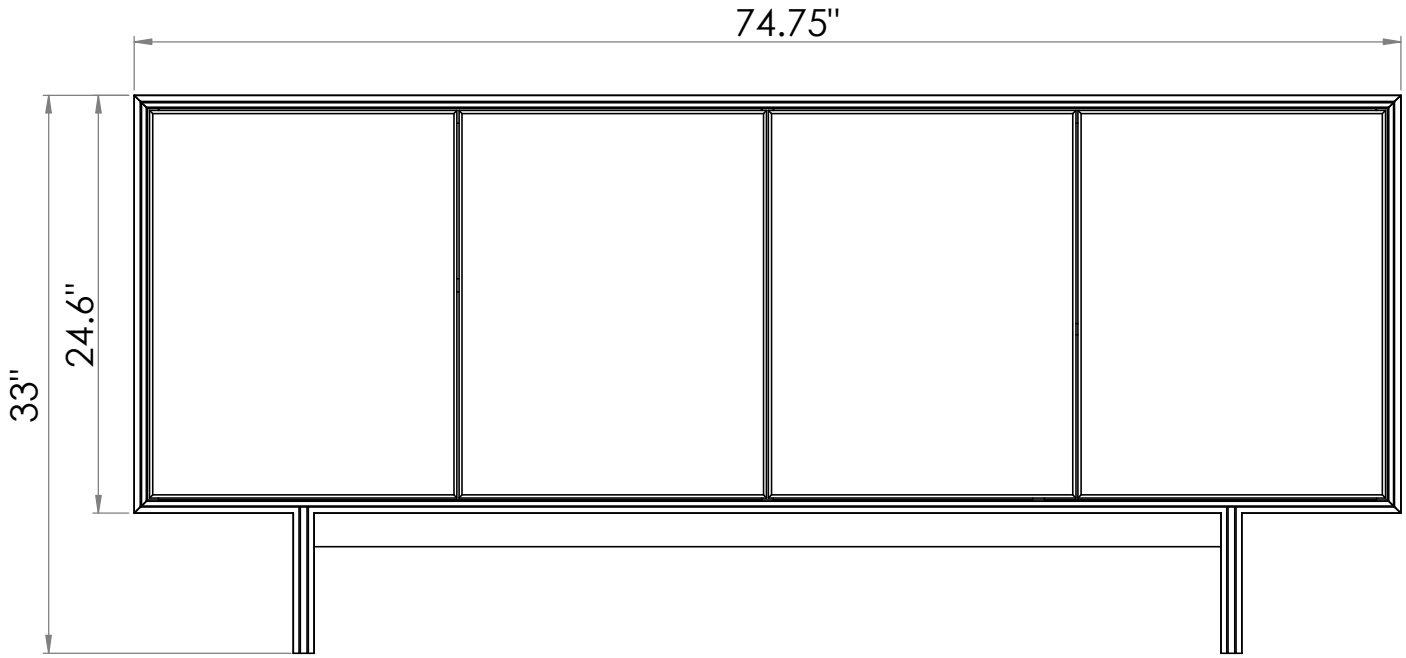

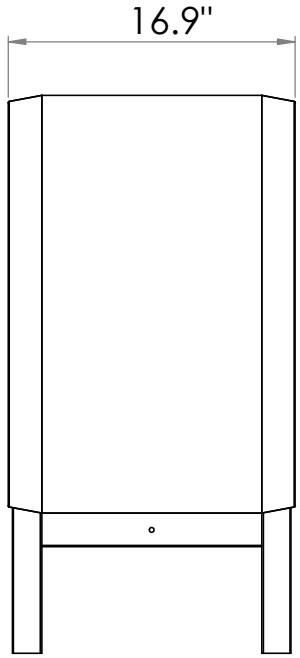

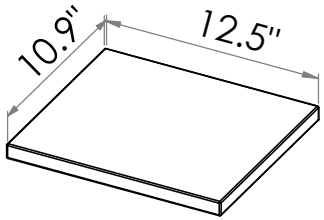

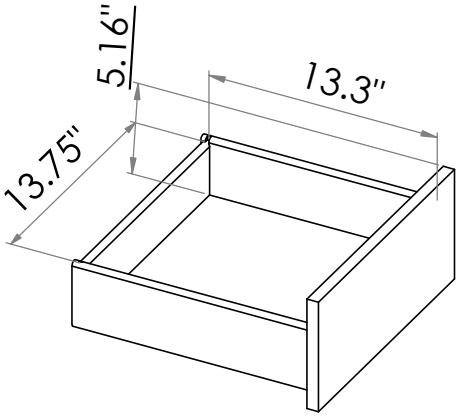

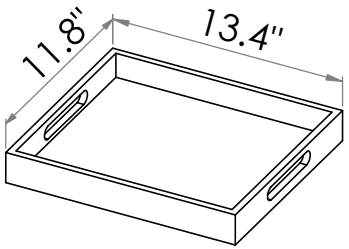

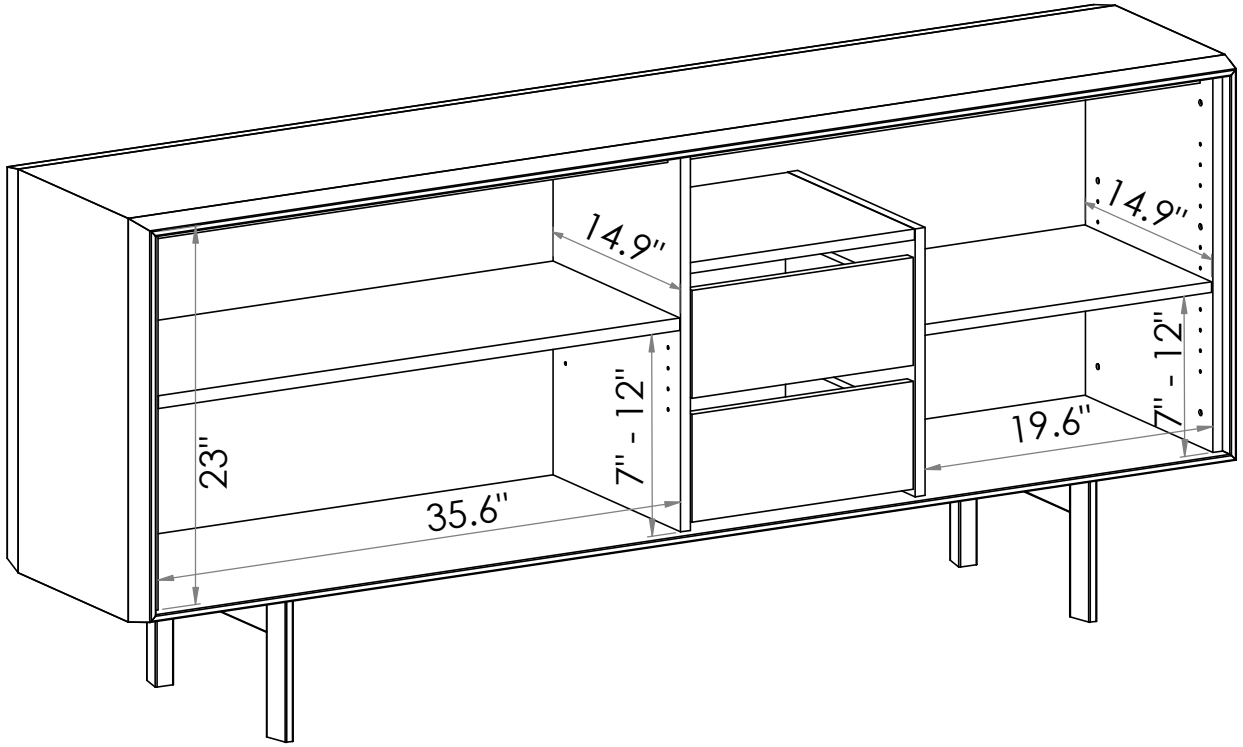

HANSEN
INTERIORS
YOUR PREMIERE SOURCE FOR SCANDINAVIAN DESIGN